CELLULAR RESPIRATION

As a result of digestion different food staff broken down to simple molecules- proteins into amino acids, carbohydrates into simple sugar (mainly glucose) and fat into fatty acids and gylcerol. These simple molecules are then absorbed by blood and lymphatic vessels and transported to tissues. Within the cells these molecules are then metabolised. This activity within the cell is the cellular respiration. It is the third level of respiration, which we have already studied. During the process oxidation of food occurs with the simultaneous liberation of energy and production of ATP molecule.

Glucose is the ideal fuel for our body. So, in the process glucose is metabolised to produce ATP molecules. The process is basically of two types- anaerobic and aerobic.

Anaerobic respiration- It occurs in absence of oxygen. It is the mode of respiration in lower organisms like bacteria and yeast. Energy production in this process is low. On the other hand **Aerobic respiration** occurs in presence of oxygen and the amount of energy production is also very high.

The aerobic cellular metabolic pathway of glucose takes place in four stages- Glycolysis, Oxidation of Pyruvic acid, Krebs cycle and Oxidative phosphorylation.

Glycolysis- The breakdown of glucose to pyruvic acid is called glycolysis. The enzymes for the reactions present in the cytoplasm of the cell. The reaction pathway is called EMP (Embden-Meyerhof-Parnas). From one molecule of glucose two molecules of pyruvic acids are formed. Two molecules of ATP are consumed in the process and there is a net gain of 10 – 2 = 8 ATP molecules. The hydrogen pair released is accepted by NAD (Nicotinamide Adenine Dinucleotide)

Oxidation of Pyruvic acid- In aerobic condition pyruvic acid molecule undergo dehydrogenation. By elimination of a pair of hydrogen from each molecule of pyruvic acid with simultaneous decarboxylation, it changes to *Acetyle-coenzyme A.* Six molecules of ATP are generated for two Pyruvic acid molecule.

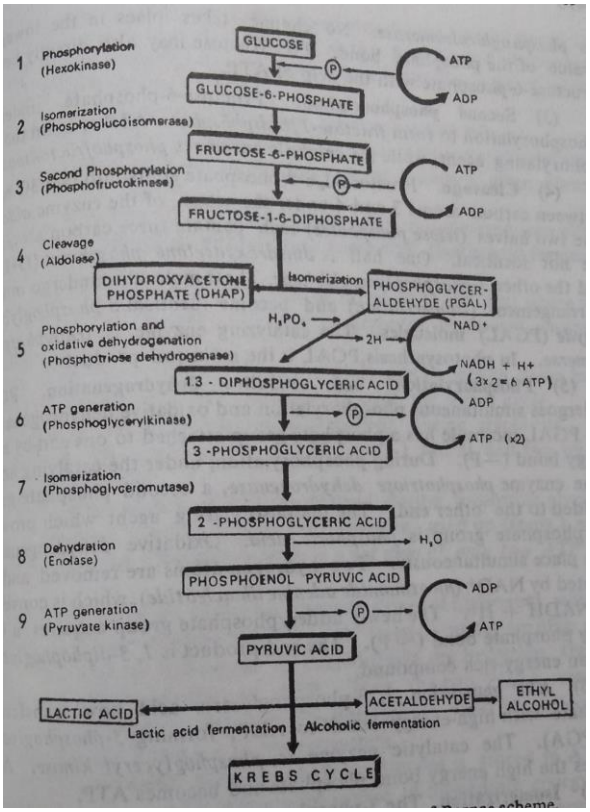

Fig. 1- Reactions of Glycolysis

Glycolysis itself is an anaerobic process. But, it is a common initial process for both aerobes and anaerobes, ie, up to the formation of pyruvic acid the path is common for all. After forming pyruvic acid in aerobic organism it undergoes oxidation as shown above and then for krebs cycle. In animal muscle under scarcity of oxygen pyruvic acid may temporarily form lactic acid.

$$C_6H_{12}O_6 \text{ ----------} \rightarrow 2CH_3CH(OH)COOH \quad + 2\ ATP$$

Lactic acid

In anaerobic pathway (fermentation), as in yeast pyruvic acid undergo decarboxylation to produce acetaldehyde and CO_2. Acetaldehyde acts as the final hydrogen acceptor. By accepting a pair of hydrogen acetaldehyde produces finally ethanol or ethyl alcohol.

$$C_6H_{12}O_6 \text{ ----------} \rightarrow 2CO_2 + 2\ C_2H_5OH \quad + 2\ ATP$$

Ethyl alcohol

Krebs Citric acid cycle- The acetyle coenzyme A, on entering to mitochondria combines with the Oxaloacetic acid present in the mitochondrial matrix and produces a molecule of citric acid. Then go through a cyclic reaction (Fig.2) to produce Oxaloacetic acid or oxaloacitate again. The reaction pathway was discovered by an English biochemist Sir Hans Krebs in 1937.

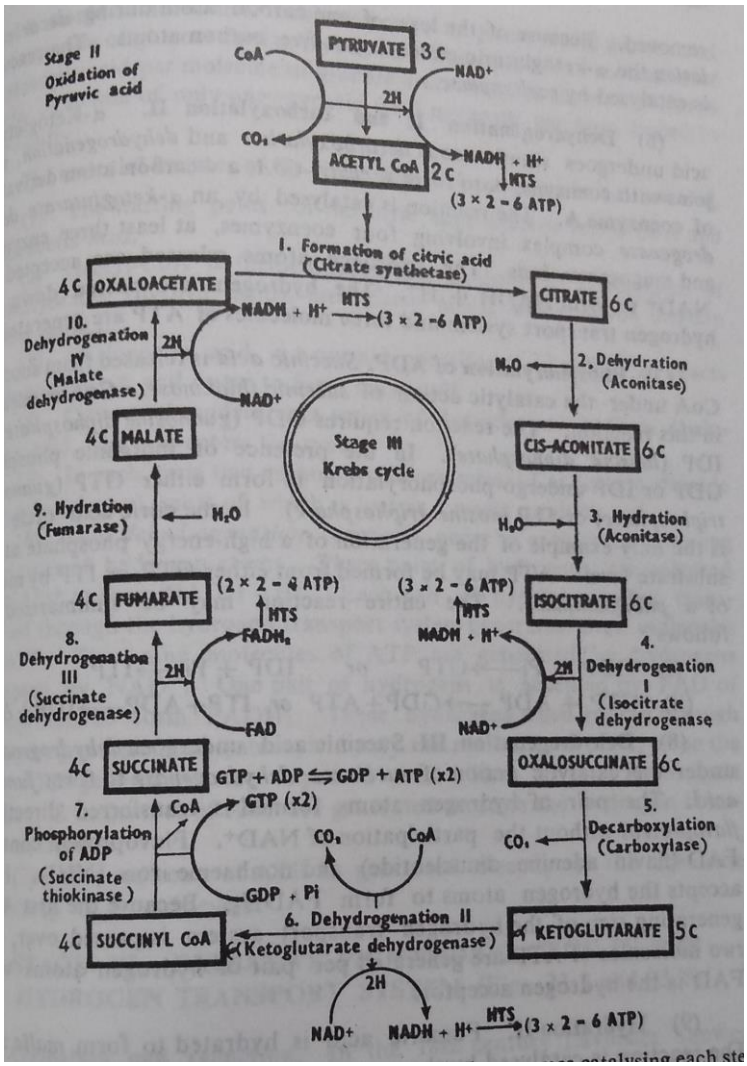

Fig.- Cyclic reactions of Krebs cycle

This cycle is also known as TCA (Tricarboxylic Acid) cycle. During the process four dehydrogenations and two decarboxylation occurs. In case of three dehydrogenation or oxidation (step 4,6 and 10 in the fig.2) hydrogen pair is accepted by NAD and in one case (step 8 in the Fig.2) hydrogen pair is accepted by FAD(Flavin adenine dinucleotide). There is a total production of 24 ATP molecules for one molecule of glucose in the cycle.

Oxidative Phosphorylation in the hydrogen transport system- it is located in the inner mitochondrial membrane**.** Also known as ETS (Electron transport System).This system is composed of some hydrogen acceptors. The hydrogen atoms released in glycolysis , pyruvic acid oxidation and krebs cycle, although initially accepted by NAD or FAD, pass through these hydrogen acceptors and finally accepted by molecular oxygen. During their fast movement hydrogen or electron release some free energy. ADP molecule undergoes phosphorylation by addition with inorganic phosphate to trap that energy by forming ATP molecules at three different sites.

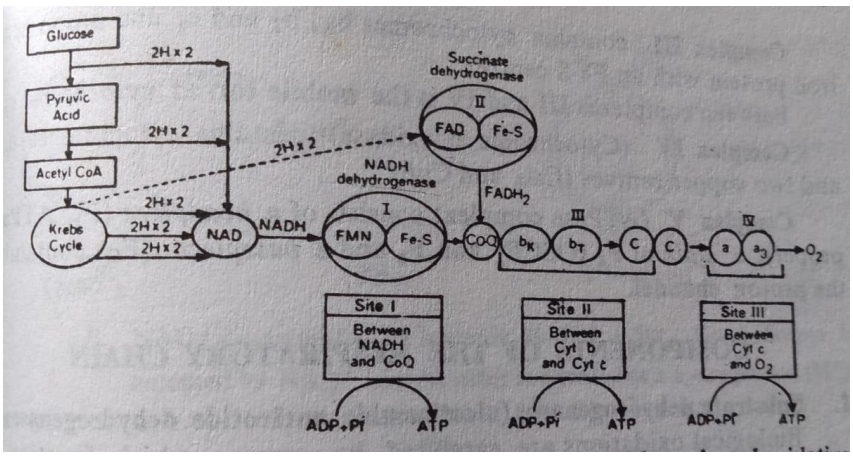

Fig.3- Electron transport system.

Name of the step	No of ATP molecules consumed	APT molecule produce	Net gain of ATP molecule
Glycolysis	2	10	8
Oxidation of Pyruvic acid	-	6	6
Krebs Cycle	-	24	24
Total ATP produce from one molecule of Glucose			38

Table- Showing the ATP production during cellular metabolism of one molecule of glucose.

The overall equation for cellular respiration in presence of oxygen can be represented as-

$$C_6H_{12}O_6 + 6O_2 + 38ADP + 38Pi \longrightarrow 6CO_2 + 6H_2O + 38ATP$$